DEHRADUN PUBLIC SCHOOL
ASSIGNMENT (2022-23)
SUBJECT - PHYSICS (042)
CLASS – XI

CHAPTER – 2 (UNITS AND MEASUREMENTS)

Q1. Read the questions and tick the correct option.

i. If force (F), velocity (V) and time (T) are taken as fundamental units, then the dimensions of mass are :

a. $[FVT^{-1}]$ b. $[FVT^{-2}]$ c. $[FV^{-1}T^{-1}]$ d. $[FV^{-1}T]$

ii. Which two of the following quantities are dimensionally equivalent:

a. Force b. Pressure c. Young's Modulus d. Energy

iii. Which of the following ratios has the dimensions of mass?

a. $\frac{\text{Volume}}{\text{Density}}$ b. $\frac{\text{Surface Tension}}{(\text{Angular Velocity})^2}$

c. $\frac{\text{Linear Momentum}}{\text{Force}}$ d. $\frac{\text{Pressure}}{\text{Power}}$

iv. 'Parsec' is the unit of:

a. time b. distance c. frequency d. angular acceleration

v. Which among the following quantity has unit but no dimension:

a. angle b. stress c. relative velocity d. relative density

Q2. Assertion and Reason Type Questions.

Directions: In each of the following questions, a statement of **Assertion (A)** is followed by a statement of **Reason (R).** While answering a question, choose the correct one and mark it as

a. If both **Assertion (A)** and **Reason (R)** are true and Reason (R) is the correct explanation of Assertion.

b. If both **Assertion (A)** and **Reason (R)** are true but Reason is not the correct explanation of the **assertion (A)**.

c. If **Assertion (A)** is true and **Reason (R)** is false.

d. If both **Assertion (A)** and **Reason (R)** are false.

i. **Assertion :** Specific gravity of a fluid is a dimensionless quantity.
Reason : It is the ratio of density of the fluid to the density of water.

ii. **Assertion :** When we change the unit of measurement of quantity, its numerical value changes.
Reason : Smaller the unit of measurement smaller is its numerical value

Q3. Answer the following questions.

i. What are the limitations of dimensional analysis?

ii. Define the unit of a physical quantity.

iii. State the principle of homogeneity of dimensions.

iv. Assuming that the mass m of the largest stone that can be moved by a flowing river depends on velocity v, the density d and acceleration due to gravity g, show that m varies directly as the sixth power of velocity of flow.

v. Check the dimensional consistency of the equation escape velocity $\upsilon = \sqrt{\frac{2GM}{R}}$ where G is Gravitational constant, M is mass of satellite and R is radius of circular orbit.

vi. Convert one newton to dyne.

vii. If the unit of force is 1 k N, unit of length is l km, and unit of time is 100 s, what will be unit of mass?

viii. Check the correctness of the equation $FS = \frac{1}{2} mv^2 - \frac{1}{2} mu^2$ where F is the force acting on body, m is mass of the body, S is the distance travelled when velocity changes from u to v.

CASE STUDY

Q4. A physical equation must be dimensionally homogeneous. This is called as principle of homogeneity of dimensions. According to this principle, only that formula is correct, in which the dimensions of various terms on one side of the relation are equal in the respective dimensions of these terms on the other side of the relation. The principle of homogeneity of dimensions is used to check the correctness of a physical equation and to obtain the relationship among various physical quantities involved in a physical relation. This principle can also be employed to find the dimensions of an unknown quantity in a given relation if the dimensions of all other quantities are known.

i. The distance travelled by a body in nth second is given by $S_{nth} = u + \frac{a}{2}(2n - 1)$ where u is the initial velocity and *a* is acceleration. The dimensions of S_{nth} are

a. L b. LT^{-1} c. LT^{-2} d. $L^{-1}T$.

ii. Power P is related to distance *x* and time *t* as

$$V = \frac{b - x^2}{at}$$

The dimensional formula of b is

a. $[M^0LT^{-2}]$ b. $[M^0L^2T^2]$ c. $[M^0L^2T^{-2}]$ d. $[M^0L^2T^0]$

iii. The wavelength associated with a particle of mass m and moving with velocity *v* given by $\lambda = \frac{h}{mv}$, where h is Plank's constant. The dimensional formula for h is

a. $[ML^2T]$ b. $[ML^{-1}T^{-1}]$ c. $[ML^2T^{-1}]$ d. $[MLT^{-1}]$

iv. Force (F), distance (x) and time (t) are related as $F = a\sqrt{x} + bt^2$. The dimensions of (a/b) are.

a. $[M^0L^{1/2}T^{1/2}]$ b. $[M^0L^{-1/2}T^2]$ c. $[M^0L^2T^{-1}]$ d. $[MLT^{-1/2}]$

v. In the relation $x = at^2 + bt^3$, where x is distance covered in time t, the dimensions of *a* and b are

a. $[M^0LT^{-1}]$, $[M^0LT^{-2}]$ b. $[ML^0T^{-1}]$, $[M^0L^{-1}T^{-1}]$

c. $[M^0LT^{-2}]$, $[M^0LT^{-3}]$ d. $[MLT^{-3}]$, $[MLT^{-2}]$

CHAPTER - 3 (MOTION IN A STRAIGHT LINE)

Q1. Read the questions and tick the correct option.

i. A child playing on the roof of the building 10 m high accidently drops a stone. A person standing on the ground notices it. How much time does he have to move away and save himself from being hurt:

a. 10.2 sec b. 20.1 sec c. 1.4 sec d. 1.7sec

ii. When a ball is thrown up vertically with velocity v_0 it reaches a maximum height of h, if one wishes to triple the maximum height then the ball should be thrown with velocity:

a. $\sqrt{3}\ v_0$ b. $3\ v_0$ c. $9\ v_0$ d. $3/2\ v_0$

iii. A body moves with uniform velocity, its acceleration is:

a. Zero b. Finite c. Infinite d. Negative

iv. An automobile traveling with a speed of 60 km / hr can brake to stop within a distance of 20 m. If the car is going twice as fast, i.e., 120 km / hr, the stopping distance will be:

a. 20m b. 40m c. 60m d. 80m

v. If the displacement of a body is proportional to square of time then:

a. The body moves with uniform velocity.
b. The body moves with uniform acceleration.
c. The body moves with increasing acceleration.
d. The body moves with decreasing acceleration.

Q2. Assertion and Reason Type Questions.

Directions: In each of the following questions, a statement of **Assertion (A)** is followed by a statement of **Reason (R).** While answering a question, choose the correct one and mark it as

a. If both **Assertion (A)** and **Reason (R)** are true and Reason (R) is the correct explanation of Assertion.
b. If both **Assertion (A)** and **Reason (R)** are true but Reason is not the correct explanation of the **assertion (A)**.
c. If **Assertion (A)** is true and **Reason (R)** is false.
d. If both **Assertion (A)** and **Reason (R)** are false.

i. **Assertion :** The average velocity of the object over an interval of time is either smaller than or equal to the average speed of the object over the same interval.
Reason : Velocity is a vector quantity and speed is a scalar quantity.

ii. **Assertion :** A body can have acceleration even if the velocity is zero at that instant of time.
Reason : The body will be momentarily at rest when it reverses its direction of motion.

Q3. Answer the following questions.

i. Define average and instantaneous velocity.
ii. A ball is thrown vertically upwards. Draw the velocity –time curve.
iii. Can a particle with zero acceleration speed up?
iv. Can the direction of velocity of an object change, when acceleration is constant.
v. If the instantaneous velocity of a particle is zero, will its instantaneous acceleration be necessarily zero?
vi. Derive the relation analytically for uniformly accelerated motion along a straight line

$S = ut + \frac{1}{2}at^2$ where symbols have their usual meaning.

vii. Derive the relation analytically for uniformly accelerated motion along a straight line $\upsilon^2 - u^2 = 2aS$, where symbols have their usual meanings.
viii. Prove that the distance travelled by a body in nth second of its motion is

$S_{nth} = u + \frac{a}{2}(2n - 1)$

CASE STUDY

Q4. The average velocity tells us how fast an object has been moving over a given time interval but does not tell us how fast it moves at different instants of time during that interval. For this, we define instantaneous speed. It is the rate of change of distance with respect to time. v=ds/dt Instantaneous speed is always greater than or equal to zero and is a scalar quantity.

i. Displacement of an object depends upon time as $x = 4t^2 - 3t + 1$, its velocity at time2 second is

a. 17m/s b. 13m/s c. 20m/s d. 30m/s

ii. If an object is moving in a uniform motion then

a. Its average velocity is constant but its instantaneous velocity is variable.

b. Its average velocity as well as instantaneous velocity is constant
c. Its average velocity is constant and instantaneous velocity both are variable.
d. Its average velocity is variable but its instantaneous velocity is constant.

iii. An object starts from rest moving with an acceleration a = 2t, then its instantaneous velocity is
a. $V = 4t^2$ b. $V = 4t^2 + 2$ c. $V = 2t^2$ d. $V = t^2$

CHAPTER – 4 (MOTION IN A PLANE)

Q1. Read the questions and tick the correct option.

i. A boat moves from a point A(4î+5ĵ) to another point across the river. The new position of the boat is given by B (−7î−9ĵ). The displacement vector is given by.
a. 11î +14ĵ b. -11î -14ĵ c. -11î +14ĵ d. 11î -14ĵ

ii. A body is projected horizontally from a point above the ground. The motion of the body is given by the equations x = 2t and $y = 5t^2$ where x and y are horizontal and vertical displacements in m at time t. The trajectory of the body is.
a. a straight line b. a circle c. an ellipse d. a parabola

iii. Scalar is specified by number and units. Here the number represents its
a. Direction b. Magnitude c. Quantity d. Location

iv. A body is traveling in a circle at constant speed. It
a. has an inward acceleration b. has constant velocity.
c. has no acceleration d. has an outward radial acceleration

v. If the quantity, position of a particle is represented using + and - signs then, the position is being expressed in
a. one dimension b. two dimension
c. three dimension d. first the integers are in use

Q2. Assertion and Reason Type Questions.

Directions: In each of the following questions, a statement of **Assertion (A)** is followed by a statement of **Reason (R).** While answering a question, choose the correct one and mark it as
a. If both **Assertion (A)** and **Reason (R)** are true and Reason (R) is the correct explanation of Assertion.
b. If both **Assertion (A)** and **Reason (R)** are true but Reason is not the correct explanation of the **assertion (A)**.
c. If **Assertion (A)** is true and **Reason (R)** is false.
d. If both **Assertion (A)** and **Reason (R)** are false.

i. **Assertion :** The dot product of one vector with another vector may be a scalar or a vector.
Reason : If the product of two vectors is a vector, then product is called a dot product.

ii. **Assertion :** A physical quantity can be regarded as a vector quantity, if magnitude as well as direction is associated with it.
Reason : A physical quantity can be regarded as a scalar quantity, if it is associated with magnitude only.

Q3. Answer the following questions.

i. A boy stands at 78.4 m from a building and throws a ball which just enters a window 39.2 m above the ground. Calculate the velocity of the projection of the ball.

ii. The equation of trajectory of an oblique projectile is
$$y = 3-\sqrt{x} - 12gx^2$$

What is the initial velocity in m/s and the angle of projection of the projectile in degree?

iii. Two particles located at a point begin to move with velocities 4 ms^{-1} and 1 ms^{-1} horizontally in opposite directions. Determine the time when their velocity vectors become perpendicular .Assuming that the motion takes place in a uniform gravitational field of strength g.

iv. The greatest and the least resultant of two forces acting at a point are 29 N and 5 N respectively. If each force is increased by 3 N, find the resultant of two new forces when acting at a point at an angle of 90° with each other.

v. A projectile is fired horizontally with a velocity of 98 ms^{-1} from the top of a hill 490 m high. Find:

i. the velocity with which it strikes the ground.

ii. the time taken to reach the ground.

vi. At what point of the trajectory of a ball thrown upward is the acceleration perpendicular to the velocity?

vii. At what angle a ball must be thrown to get maximum horizontal range?

viii. What is the angle between **A×B** and **B×A**?

CASE STUDY

Q4. The physical quantities which have both magnitude as well as direction are known as vector quantities. The vectors may be equal, negative, collinear, coplanar, unit vector or orthogonal vectors. The vectors which act in different directions can be added either by triangle or parallelogram or by polygon law of vectors. Whereas the product of vectors can be scalar product (dot) or the vector product (cross). The resultant vector is scalar product of two vectors is always a scalar, on the other hand vector product of two vectors is always a vector quantity. The resultant vector when two vectors are in different directions is given by

$R = \sqrt{A^2 + B^2 + 2AB\cos\theta}$. Here A and B are two vectors and θ is angle between vectors.

The scalar product of two vectors A and B is $\vec{A}.\vec{B} = AB\cos\theta$ and vector product of two vectors A and B is $\vec{A} \times \vec{B} = AB\sin\theta\,\hat{n}$

i. Angle between negative vectors is

a. 0° b. 90° c. 180° d. 260°

ii. If $\vec{A} = n\hat{i} - \hat{j} + 2\hat{i}$ and $\vec{B} = 2\hat{i} + 2\hat{j} - k$ are perpendicular to each other then value of n is

a. 1 b. 2 .c. 3 d. 4

iii. If $\vec{A} \times \vec{B} = 0$ then

a. $\vec{A}$ is perpendicular to $\vec{B}$

b. $\vec{A}$ is parallel to $\vec{B}$

c. $\vec{A}$ is equal to $\vec{B}$

d. $\vec{A}$ is neither perpendicular nor parallel to $\vec{B}$

iv. If $\vec{A}.\vec{B} = |\vec{A} \times \vec{B}|$ then angle between $\vec{A}$ and $\vec{B}$ is

(a) 90° (b) 60° (c) 45° (d) 30°

v. If the magnitude of sum of two vectors is equal to magnitude of difference of two vectors, the angle between vectors is

(a) 0° (b) 180° (c) 45° (d) 90°

CHAPTER – 5 (LAWS OF MOTION)

Q1. Read the questions and tick the correct option.

i. Which of the following is known as law of inertia?
   a. Newton's first law of motion
   b. Newton's second law of motion
   c. Newton's third law of motion
   d. Law of conservation of momentum

ii. A body of mass 50 g is moving with a constant velocity of 5 m s^{-1} on a horizontal smooth surface. The force acting on the body is
   a. 1 N b. 2 N c. 5 N d. zero

iii. Change in momentum is given by
   a. Force x time b. Force x mass
   c. Force x velocity d. Force x Distance

iv. If a running horse suddenly stops, then the rider falls forward. This is due to
   a. Inertia of rest b. Inertia of motion
   c. Inertia of direction d. None of these

v. A machine gun fires a bullet of mass 40 g with a velocity of 1200 m/s. The man holding it can exert a maximum force on 144 N on the gum. How many bullets can he fire per second at the most?
   a. one b. four c. two d. three

Q2. Assertion and Reason Type Questions.

Directions: In each of the following questions, a statement of **Assertion (A)** is followed by a statement of **Reason (R).** While answering a question, choose the correct one and mark it as

a. If both **Assertion (A)** and **Reason (R)** are true and Reason (R) is the correct explanation of Assertion.
b. If both **Assertion (A)** and **Reason (R)** are true but Reason is not the correct explanation of the **assertion (A)**.
c. If **Assertion (A)** is true and **Reason (R)** is false.
d. If both **Assertion (A)** and **Reason (R)** are false.

i. **Assertion :** It is difficult to move a cycle along the road with brakes on.
   Reason : Sliding friction is greater than rolling friction.

ii. **Assertion :** The driver in a vehicle moving with a constant speed on a straight road is a non-inertial frame of reference.
   Reason : A reference frame in which Newton's laws of motion are applicable is non-inertial.

Q3. Answer the following questions.

i. Does F = ma, represent Newton's second law of motion under all conditions? Give a reason for your answer.
ii. Several passengers are standing in a running bus, it is said to be dangerous. How will you justify the statement?
iii. Define coefficient of static and kinetic friction.
iv. What do you mean by angle of friction? Obtain the relation between angle of friction and coefficient of friction.
v. What do you mean by angle of repose? Deduce its relation with coefficient of friction.
vi. What are centripetal and centrifugal forces? Find an expression for both centripetal and centrifugal force. Give example also.

vii. Show the Newton's second law of motion is real law of motion.
viii. State principle of conservation of momentum. Explain why a gun recoils when bullet is fired from it.

CASE STUDY

Q4. According to Newton's second law of motion F = ma, where F is the force required to produce acceleration *a* in the body of mass m. When *a* = 0 i.e. the object is moving with uniform velocity then F = 0, it means no force is required to move the body with a uniform velocity along a straight line. If a force F acts on the body for time t seconds, the effect of forces is given by impulse (I) = F x t = change in linear momentum of body.

i. A cricketer catches the ball of mass 150 g in 0.3s moving with velocity 20 ms^{-1} then force experienced is
a. 10 N b. 30 N c. 3 N d. 0.3 N

ii. An impulsive force of 100 N acts on a body for 1 s. What is the change in its linear momentum?
a. 1Ns b. 10 Ns c. 100Ns d. 1000 Ns

iii. The units of impulse are same as that of
a. linear momentum b. energy c. velocity d. power

iv. A 30g bullet travelling initially at 500 m/s penetrates 12 cm into wooden block. The average force exerted will be
a. 41250 N b. 31750 N c. 30400 N d. 31250 N

b. The linear momentum of a body changes at a rate of 10 kg m s^{-1}. Force acting on the body is
a. 1 N b. 10 N c. 1 kg*f* d. 10 kg*f*.

CHAPTER – 6 (WORK, ENERGY AND POWER)

Q1. Read the questions and tick the correct option.

i. When a body is thrown up work done by gravity on the body is
a. Positive b. zero c. negative d. can't say

ii. A body is undergoing non uniform circular motion. Work done by radial force on body is
a. Zero b. positive c. negative d. none of these

iii. Which of the following is non conservative force?
a. Gravitational Force b. Electrostatic Force
c. Magnetic Force d. Force of friction

iv. A body has uniform circular motion. Which of the quantity of the body will remain the same?
a. Velocity b. Momentum
c. K.E. d. Both velocity and momentum

v. If the momentum of body is increased by 0.01%, then its K.E. will be increased by
a. 0.01% b. 0.02% c. 0.03% d. 0.04%

Q2. Assertion and Reason Type Questions.

Directions: In each of the following questions, a statement of **Assertion (A)** is followed by a statement of **Reason (R).** While answering a question, choose the correct one and mark it as

a. If both **Assertion (A)** and **Reason (R)** are true and Reason (R) is the correct explanation of Assertion.
b. If both **Assertion (A)** and **Reason (R)** are true but Reason is not the correct explanation of the **assertion (A)**.
c. If **Assertion (A)** is true and **Reason (R)** is false.

d. If both **Assertion (A)** and **Reason (R)** are false.

i. **Assertion :** Centripetal force does no work.
Reason : Force and displacement are perpendicular to each other.
ii. **Assertion :** Work done in uniform circular motion is zero.
Reason : Force is always directed along the displacement.

Q3. Answer the following questions.

i. How many MeV are there in a 1-watt hour?
ii. The momentum of an object is doubled. How does its kinetic energy changes?
iii. What are conservative and non conservative forces, explain with examples.
iv. Discuss elastic collision in one dimension.
v. A flexible chain of length l and mass m is slowly pulled up at a constant speed over the edge of a table by a force F(x) parallel to the edge of the tabletop. Calculate the work done by F(x).
vi. The heart of a man pumps 4-liter blood per minute at a pressure of 130 mm of mercury. If the density of mercury is 13.6 gm cm^3, then calculate the power of the heart.
vii. A ball falls under gravity from a height of 10m with an initial downward velocity of u. It collides with the ground, loses 50% of its energy in the collision, and then rises back to the same height. Find the initial velocity u.
viii. A 1 kg mass on a floor is connected to a 2 kg mass by a string passing over a pulley as shown in the figure. Obtain the speed of the masses (after they are released) when the 2 kg mass just touches the floor. Show that the gain in kinetic energy of the system equals the loss in its potential energy. The 2 kg mass is initially at a height 3 m above the ground.

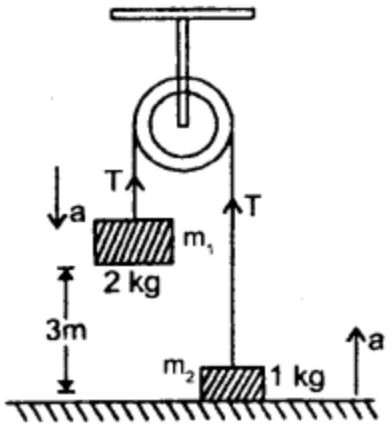

CASE STUDY

Q4. Kinetic energy of a body is the energy possessed by body by virtue of its motion. K.E. of a body of mass m moving with velocity v is given by, $K = \frac{1}{2} mv^2$.

Potential energy of a body is the energy possessed by the body by virtue of its position. P.E. = mgh where symbols have their usual meanings. Energy can neither be created nor be destroyed, however the energy can be changed from one form of energy to the other, such that energy appearing in one form is equal to the energy disappearing in other form.

i. A light and heavy body have equal K.E. Which has greater momentum?
a. A heavy body
b. A light body
c. Both have equal momentum
d. Data given is incomplete

ii. If the velocity of a body is doubled its K.E. becomes
a. twice
b. half
c. four times
d. one fourth

iii. If the momentum of a body is increased by 0.01% then its K.E. will be increased by

a. 0.01% b. 0.02%

c. 0.03% d.0.04%

iv. Two bodies of unequal masses have same linear momentum, which one has greater K.E.?

a. lighter body b. heavy body

c. both bodies have equal d. Data given is incomplete

v. A light and heavy body have same linear momentum. Which one has greater K.E. ?

a. A heavy body b. A light body

c. Both have equal momentum d. Data given is incomplete

CHAPTER – 7 (SYSTEM OF PARTICLES AND ROTATIONAL MOTION)

Q1.Read the questions and tick the correct option.

i. If a body is rotating about an axis, passing through its centre of mass then its angular momentum is directed along its

a. Radius b. Tangent c. Circumference d. Axis of rotation

ii. Which is the wrong relation from the following?

a. t = I a b. F = ma c. L = I w d. I = t a

iii. The product of the moment of inertia and the angular acceleration is:

a. force b. torque c. work d. angular momentum

iv. The rotational inertia of a rigid body is referred to as its _____.

a. Moment of energy b. Moment of force

c. Moment of inertia d. Moment of acceleration

v. If the moment of inertia of a rotating body is increased then what will be the effect on the angular velocity?

a. It will increase b. It will decrease

c. There will be no effect d. First increases then decreases

Q2. Assertion and Reason Type Questions.

Directions: In each of the following questions, a statement of **Assertion (A)** is followed by a statement of **Reason (R).** While answering a question, choose the correct one and mark it as

a. If both **Assertion (A)** and **Reason (R)** are true and Reason (R) is the correct explanation of Assertion.

b. If both **Assertion (A)** and **Reason (R)** are true but Reason is not the correct explanation of the **assertion (A)**.

c. If **Assertion (A)** is true and **Reason (R)** is false.

d. If both **Assertion (A)** and **Reason (R)** are false.

i. **Assertion :** If polar ice melts, days will be longer.

Reason : Moment of inertia increases and thus angular velocity decreases.

ii. **Assertion :** The earth is slowing down and as a result the moon is coming nearer to it.

Reason : The angular momentum of the earth moon system is not conserved.

Q3. Answer the following questions.

i. The moment of inertia of a body about a given axis is 1.2 kg m^2. Initially, the body is at rest. In order to produce a rotational K.E. of 1500J, for how much duration, an acceleration of 25 $rads^{-2}$ must be applied about that axis.

ii. 60 Point masses m_1 and m_2 are placed at the opposite ends of a rigid rod of length l and negligible mass. The rod is to be set rotating about an axis ⊥ to it. Find the position on this rod through which the axis should pass in order that the work required to set the rod rotating with angular velocity ω_0 should be minimum.

iii. Show that in the absence of an external force the velocity of the C.M. of a system remains constant.
iv. Two masses one n times as heavy as the other have the same K.E. What is the ratio of their momenta?
v. What is the significance of the C.M. of the system of particles?
vi. If one of the particles is heavier than the other, to which side will their C.M. shift?
vii. Why do we prefer to use a wrench with a long arm?
viii. Two solid spheres of the same mass are made of metals of different densities. Which of them has a larger M.I. about a diameter?

CASE STUDY

Q4. The centre of mass of a body is a point at which the centre mass of the body is supposed to be concentrated. The C.M. of a body may or may not be within the body. The position vector of C.M. of the system of two particles of masses m_1 and m_2 having position vectors $\vec{r_1}$ and $\vec{r_2}$ is given by

$$\vec{r} = \frac{m_1\vec{r_1} + m_2\vec{r_2}}{m_1 + m_2}$$

For an isolated system, the C.M. moves with constant velocity when an external force acts on it.

$$\bar{r}_{CM} = \text{constant}$$

i. For which of the following does the centre of mass lie outside the body?
a. solid sphere b. solid cylinder
c. a disc d. a ring

ii. If two particles of masses m_1 and m_2 move with velocities v_1 and v_2 towards each other on a smooth horizontal table. What will be the velocity of their C.M.?

a. $V = \frac{m_1v_1 + m_2v_2}{m_1 + m_2}$ b. $V = \frac{m_1v_1 - m_2v_2}{m_1 + m_2}$

c. $V = \frac{m_1v_1 + m_2v_2}{m_1 - m_2}$ d. $V = \frac{m_1v_1 - m_2v_2}{m_1 - m_2}$

iii. A solid sphere of radius R is placed on a smooth horizontal surface. A horizontal force F is applied at a height *h* from the lowest point. For the maximum acceleration of C.M.
a. h = R b. h = 2 R
c. h = 0 d. the acceleration will be same whatever *h* may be.

iv. An electron and a proton move towards each other with velocities v_1 and v_2 respectively. The velocity of their centre of mass is
a. zero b. v_1 c. v_2 d. $\frac{v_1 + v_2}{2}$

v. A bomb dropped from an aeroplane in level flight explodes in the middle. The centre of mass of the fragments
a. is at rest
b. moves vertically upwards
c. move vertically downwards
d. Continue to follow the same parabolic path which it would have followed if their was no explosion.

CHAPTER – 8 (GRAVITATION)

Q1. Read the questions and tick the correct option.

i. The escape velocity for a body projected vertically upwards from the surface of the earth is 11.2km/s. If the body is projected at an angle of 60^0 with the vertical, the escape velocity will

a.11/2km/s b.11.2km/s
c.2km/s d.11km/s

ii. There is no atmosphere on the surface of the moon because

a. Moon is bigger than the earth.
b. Moon is closer to earth.
c. Root mean square velocity of the molecules at moon is greater than escape velocity.
d. Moon is a satellite.

iii. The value of acceleration due to gravity at centre of the earth is

a. $9.8 m/s^2$ b. $8 m/s^2$ c. $2 m/s^2$ d. 0

iv. At what depth below the surface of earth, the value of g is the same as that at a height of 5 km?

a. 10 km
b. 7.5 km
c. 5 km
d. 2.5 km

v. The time period of a second's pendulum in a satellite is

a. zero b. 2 c. infinity d. depends on the mass of body

Q2. Assertion and Reason Type Questions.

Directions: In each of the following questions, a statement of **Assertion (A)** is followed by a statement of **Reason (R).** While answering a question, choose the correct one and mark it as

a. If both **Assertion (A)** and **Reason (R)** are true and Reason (R) is the correct explanation of Assertion.
b. If both **Assertion (A)** and **Reason (R)** are true but Reason is not the correct explanation of the **assertion (A)**.
c. If **Assertion (A)** is true and **Reason (R)** is false.
d. If both **Assertion (A)** and **Reason (R)** are false.

i. **Assertion:** The value of 'g' varies from place to place.
Reason: 'g' is a scalar quantity.

ii. **Assertion:** The escape velocity of a body from earth's surface is 11.2km/s
Reason: The escape velocity is independent of the mass of the body.

Q3. Answer the following questions.

i. What does negative sign in gravitational potential energy signifies?
ii. Where does 1kg sugar will weigh more- Equator or poles?
iii. A satellite does not need any fuel to circle around the earth. Why?
iv. A 400 kg satellite is in a circular orbit of radius $2R_E$ about the earth. Calculate the potential energy and total energy of the satellite. Given that radius of earth, $R_E = 6.4 \times 10^6$ m and mass of the earth, $M_E = 6 \times 10^{24}$ kg.
v. State Kepler's law of planetary motion? Which law is based on angular momentum conservation?
vi. If the radius of earth is 6400 km and acceleration due to gravity is $9.8 m/s^2$, then calculate mass and density of earth.

vii. Derive an expression for the variation of acceleration due to gravity 'g' with height 'h' from the surface of the earth.

viii. With what velocity must a body be thrown upward from the surface of the earth so that it reaches at a height of $10R_E$?

(Radius of earth, $R_E = 6.4 \times 10^6$ m & $G = 6.67\times10^{-11}$ Nm^2kg^{-2}).

CASE STUDY

Cavendish's Experiment

Q4. The figure shows the schematic drawing of Cavendish's experiment to determine the value of the gravitational constant. The bar AB has two small lead spheres attached at its ends. The bar is suspended from a rigid support by a fine wire.

Two large lead spheres are brought close to the small ones but on opposite sides as shown. The name of G from this experiment came to be 6.67×10^{-11} N-m^2 / kg^2

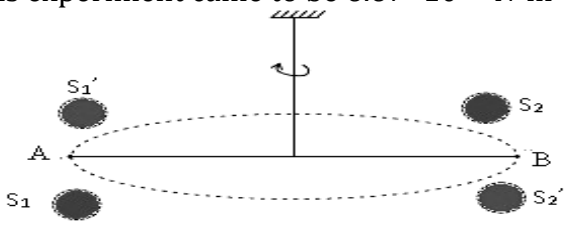

i. The big spheres attract the nearby small ones try a force which is small ones by a force which is

a. Equal and opposite
b. Equal but in same direction
c. Unequal and opposite
d. Unequal but in same direction

ii. The net force on the bar is

a. non-zero
b. zero
c. data insufficient
d. none of the above

iii. The net torque on the bar is

a. zero
b. non-zero
c. F times the length of the bar, where F is the force of attraction between a big sphere and its neighbouring
d. Both (b) and (c)

iv. The torque produces twist in the suspended wire. The twisting stops when

a. restoring torque of the wire equals the gravitational torque
b. restoring torque of the wire exceeds the gravitational torque
c. the gravitational torque exceeds the restoring torque of the wire
d. gravity stops

v. After Cavendish's experiment, there have been suggestions that the value of the gravitational constant G becomes smaller when considered over very large time period (in billions of years) in the future. If that happens, for our earth,

a. nothing will change
b. we will become hotter after billions of years
c. we will be going around but not strictly in closed orbits
d. it will be ice cold

CHAPTER – 9 (MECHANICAL PROPERTIES OF SOLIDS)

Q1. Read the questions and tick the correct option.

i. Which of the following do not affect the elasticity of a substance?
a. Hammering and annealing
b. Change in temperature
c. Impurity in the substance
d. Shape and size of the substance

ii. A stretched rubber has
a. increased kinetic energy
b. increased potential energy
c. decreased kinetic energy
d. decreased potential energy

iii. Stress is directly proportional to strain
a. Within elastic limit
b. Within plastic limit
c. Within stretched limit
d. All of the above

iv. Young's modulus of a substance depends on
a. Its length
b. Its area
c. Acceleration due to gravity
d. None of the above

v. The effect of temperature on the value of modulus of elasticity for various substances in general
a. it increases with increase in temperature
b. remains constant
c. decreases with rise in temperature
d. sometimes increases and sometimes decreases

Q2. Assertion and Reason Type Questions.

Directions: In each of the following questions, a statement of **Assertion (A)** is followed by a statement of **Reason (R).** While answering a question, choose the correct one and mark it as

a. If both **Assertion (A)** and **Reason (R)** are true and Reason (R) is the correct explanation of Assertion.
b. If both **Assertion (A)** and **Reason (R)** are true but Reason is not the correct explanation of the **assertion (A)**.
c. If **Assertion (A)** is true and **Reason (R)** is false.
d. If both **Assertion (A)** and **Reason (R)** are false.

i. Assertion: The value of Young's Modulus 'Y' is different for all materials.
Reason: 'Y' is a constant for all materials.

ii. Assertion: The work done in stretching a rubber is stored in form of elastic potential energy.
Reason: Work is done against restoring forces.

Q3. Answer the following questions.

i. Which is more elastic- steel or rubber. Justify your answer?
ii. Among solids, liquids and gases, which possess greatest bulk modulus?
iii. Is elastic limit a property of the material of the wire?
iv. Prove that the work done in stretching a wire is given by
W = (½)stress × strain × volume.
v. What force is required to stretch a steel wire $1cm^2$ in cross section to double its length? $Y_{steel} = 2 \times 10^{11} Nm^{-2}$.
vi. The elastic limit of a steel cable and a copper wire of equal length and equal cross sectional area are joined end to end and the combination is subjected to a tension. Find the ratio of (a) the stress developed in the two wires (b) the strain developed in the two wires. Given $Y_{steel} = 2.0 \times 10^{11} N/m^2$ & $Y_{copper} = 1.1 \times 10^{11} N/m^2$.
vii. What is the effect of temperature on Young's modulus of a wire? Explain.

viii. A spherical ball contracts in volume by 0.0098% when subjected a pressure of 100 atm. Calculate itsbulk modulus. Given 1 atm = 1.013×10^5 Pa.

CASE STUDY

Q4. Stress-Strain Curve: Elastic limit is the upper limit of deforming force up to which, if deforming force is removed, the body regains its original form completely and beyond which if deforming force is increased, the body loses its property of elasticity and gets permanently deformed. Elastic limit is the property of a body whereas elasticity is the property of material of a body.

i. Elasticity is shown by materials because inter-atomic or inter-molecular forces
   a. increases when a body is deformed
   b. decreases when a body is deformed
   c. remains same when a body is deformed
   d. becomes non-zero when a body is deformed

ii. The maximum load a wire can withstand without breaking, when its length is reduced to half of its original length, will
   a. be double b. be halved
   c. be four times d. remain same

iii. Stress-strain curves for the materials A and B are shown below.

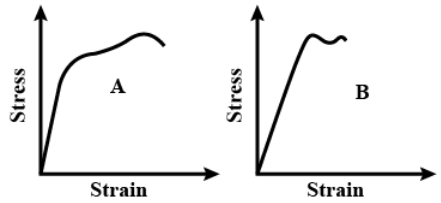

   a. A is brittle material b. B is ductile material
   c. B is brittle material d. Both a. and b.

iv. A and B are two wires. The radius of A is twice that of B. That are stretched by the same load, then the stress on B is
   a. equal to that on A b. four times that on A
   c. Two times that on A d. half that on A

v. On suspending a weight Mg, the length 'l', of elastic wire having area of cross-section 'A', becomes double the initial length. The instantaneous stress acting on the wire is
   a. Mg/ A b. Mg/2 A
   c. 2Mg/ A d. 4Mg/ A

CHAPTER – 10 (MECHANICAL PROPERTIES OF FLUIDS)

Q1. Read the questions and tick the correct option.

i. The radii of two drops are in the ratio oof3:2, their terminal velocities are in the ratio
   a. 9:4 b. 2:3
   c. 3:2 d. 2:9

ii. If the liquid does not wet the glass, the angle of contact is
   a. zero b. acute
   c. obtuse d. right angle

iii. Stirred liquid comes to rest after sometime due to
   a. Viscosity b. Surface tension
   c. Pressure d. Capillarity

iv. Two spheres of equal masses but radius r_1 and r_2 are allowed to fall in the liquid of infinite column. The ratio of their terminal velocities are

a.1 b. $r_1:r_2$

c. $r_2:r_1$ d. zero

v. Two water droplets merge with each other to form a large droplet. In this process

a. energy is liberated

b. energy is absorbed

c. energy is neither liberated nor absorbed

d. Some mass is converted into energy

Q2. Assertion and Reason Type Questions.

Directions: In each of the following questions, a statement of **Assertion (A)** is followed by a statement of **Reason (R).** While answering a question, choose the correct one and mark it as

a. If both **Assertion (A)** and **Reason (R)** are true and Reason (R) is the correct explanation of Assertion.

b. If both **Assertion (A)** and **Reason (R)** are true but Reason is not the correct explanation of the **assertion (A)**.

c. If **Assertion (A)** is true and **Reason (R)** is false.

d. If both **Assertion (A)** and **Reason (R)** are false.

i. **Assertion:** The surface tension of oil and paints is kept low.
Reason: The oil and paint can acquire maximum surface area.

ii. **Assertion:** Bernoulli's theorem is based on energy conservation.
Reason: Bernoulli's theorem is applicable to ideal liquids in streamline motion only.

Q3. Answer the following questions.

i. Why paints and lubricating oils have low surface tension?

ii. What is the effect of temperature on the viscosity of liquids and gases?

iii. Why two streamlines cannot intersect?

iv. Obtain an expression for the pressure exerted by a liquid column.

v. Water is flowing through two horizontal pipes of different diameters which are connected together. In the first pipe the speed of water is 4.0 m/s & the pressure is $2.0 \times 10^4 N/m^2$. Calculate the speed & pressure of water in the second pipe. The diameters of the pipes are 3.0 cm & 6.0 cm respectively.

vi. Deduce an expression for the excess pressure inside a soap bubble.

vii. Compute the terminal velocity with which an air bubble of diameter 0.8mm will rise in a liquid of viscosity 0.18 Pa-s and relative density 0.8. Neglect the weight of air bubble.

viii. State and prove Bernoulli's theorem.

CASE STUDY

Q4. Hydraulic Lift

Hydraulic lift is an application of Pascal's law. It is used to lift heavy loads. It is a force multiplier.

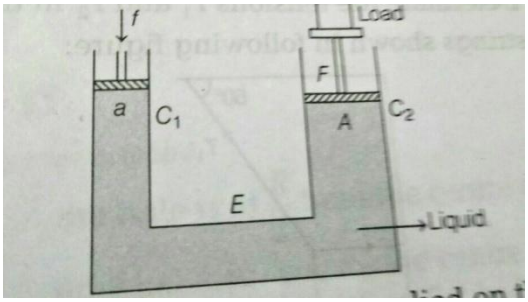

So, when small forces applied on the smaller piston (acting downward) will be appearing as a very large force (acting upward) on the larger piston. As a result of it, a heavy load placed on the larger piston is easily lifted upwards.

i. Pascal's law states that pressure in a fluid at rest is the same at all points, if
a. they are at the same height
b. they are along same plane
c. they are along same line
d. Both a. and b.

ii. Pressure is applied to an enclosed fluid as shown in the above figure. It is
a. increased and applied to every part of the fluid
b. diminished and transmitted to the walls of the container
c. increased in proportion to the mass of the fluid and then transmitted
d. transmitted unchanged to every on portion of the fluid and the walls of container

iii. Pressure at a point inside a liquid does not depend on
a. the depth of the point below the surface of the liquid
b. the nature of the liquid
c. the acceleration due to gravity at that point
d. total weight of fluid in the beaker

iv. A hydraulic lift has 2 limbs of areas A and 2 A. Force F is applied over limb of area A to lift a heavy car. If distance moved by piston P_1 is x, then distance moved by piston P_2 is

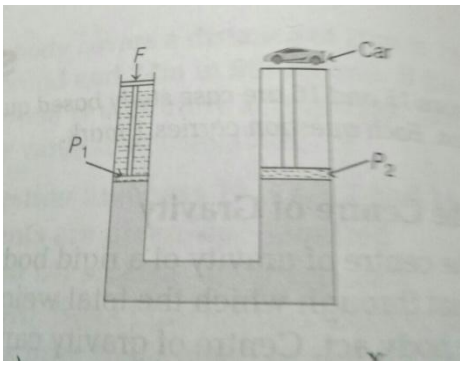

a. x
b. 2x
c. x/2
d. 4x

v. If work done by piston in the given figure on fluid is W_1, then work done by fluid in limbs on piston P_2 is
a. $W_1/4$
b. $4W_1$
c. $W_1/2$
d. W_1

CHAPTER – 11 (THERMAL PROPERTIES OF MATTER)

Q1. Read the questions and tick the correct option.

i. Specific heat of a substance is a function of
a. mass
b. weight
c. volume
d. molecular structure

ii. When water is heated from 0^0C to 10^0C its volume
a. decreases
b. first decreases and then increases
c. first increases and then decreases
d. increases

iii. The density of water is maximum at

a. 4^0C b. $0\ ^0C$

c. $10\ ^0C$ d. $5\ ^0C$

iv. Two spheres of the same material and radii 4m and 1m respectively are at temperature 1000 K and 2000 K respectively. The ratio of energies radiated by them per second is

a. 1:2 b. 2:1

c. 1:1 d. 1:4

v. Stainless steel cooking pans are preferred with extra bottoms of

a. Copper b. Silver

c. Iron d. zinc

Q2. Assertion and Reason Type Questions.

Directions: In each of the following questions, a statement of **Assertion (A)** is followed by a statement of **Reason (R).** While answering a question, choose the correct one and mark it as

a. If both **Assertion (A)** and **Reason (R)** are true and Reason (R) is the correct explanation of Assertion.

b. If both **Assertion (A)** and **Reason (R)** are true but Reason is not the correct explanation of the **assertion (A)**.

c. If **Assertion (A)** is true and **Reason (R)** is false.

d. If both **Assertion (A)** and **Reason (R)** are false.

i. **Assertion:** At absolute zero all molecular activity stops.
Reason: Absolute zero is unattainable.

ii. **Assertion:** Radiation is the fastest mode of heat transfer.
Reason: Solar energy is radiation energy.

Q3. Answer the following questions:

i. Why clear nights are colder than cloudy nights?

ii. Why invar is used to make a clock pendulum?

iii. Water is heated from below. Why?

iv. The coefficient of volume expansion of glycerine is $49 \times 10^{-5}/^0C$. Find the fractional change in its density for 30^0C rise in temperature?

v. A copper block of mass 2.5 kg is heated in a furnace to a temperature of 500^0C and then placed on a large ice block. What is the maximum amount of ice that can melt specific heat of copper=0.39J/g/ ^0C and heat of fusion of water= 335 J/g.?

vi. What is conduction, convection and radiation. Explain.

vii. Define coefficient of thermal conductivity and on what factors does it depends?

viii. Calculate the difference in temperatures between two sides of an iron plate 20 mm thick, when heat isconducted at the rate of 6×10^5cal. $min^{-1}m^{-2}$.
K for metal is 0.2 cal $s^{-1}cm^{-1}{}^0C^{-1}$.

CASE STUDY

Q4. Thermal conductivity - Three modes of heat transfer are conduction, convection and radiation. In conduction, heat is transferred from one part of body to another part at lower temperature through molecular collisions, without any actual flow of matter. When two opposite faces of slab of area of cross-section A and separated by distance x are maintained at temperatures T_1 and T_2 ($T_1 > T_2$), then rate of heat flow is

$$Q/t = KA\,(T_1 - T_2)/x,$$

Where K is called coefficient of thermal conductivity of the material of the slab. Thermal conductivities of metals are much greater than those for non metals. Gases are poor thermal conductors.

i. The unit of coefficient of thermal conductivity is

a. WmK b. $Wm^2 K$

c. JK d. W/mK

ii. A metal surface appears colder to touch than a wooden surface, because

a. metal have high specific heat

b. metal have low thermal conductivity

c. metal have high thermal conductivity

d. metals are sonorous

iii. A body of length 1m having cross- sectional area of 0.75 m^2 has heat flow through it at the rate of 6000J/s. If K=200 J/smK, the temperature difference across the ends of the body is

a. 20^0C b. 40^0C

c. 80^0C d. 100^0C

iv. Two rods having thermal conductivity in the ratio of 5:3 having equal lengths and equal cross sectional areas are joined end to end. If the temperature of the free end of the first rod is 100^0C and free end of the second rod is 20^0C, then the temperature of the junction is

a. 50^0C b. 70^0C

c. 60^0C d. 90^0C

v. Three metal rods of same length and same cross sectional area are connected in parallel. If their conductivities are 70, 110, 180 W/Mk respectively, the effective conductivity of the combination is

a. 90 b. 120

c. 130 d. 360

CHAPTER – 12 (THERMODYNAMICS)

Q1. Read the questions and tick the correct option.

i. Which of the following parameters does not characterize the thermodynamic state of matter?

a. Temperature b. Pressure

c. Work d. Volume

ii. In a cyclic process, work done by the system is

a. zero

b. more than the heat given to the system

c. equal to the heat given to the system

d. independent of heat given to the system

iii. In thermal equilibrium of two bodies the temperatures of both bodies

a. should be equal b. should be different

c. should be zero d. none of the above

iv. During adiabatic change, specific heat of a gas is

a. zero b. positive

c. negative d. infinity

v . Internal energy of an ideal gas depends upon

a. volume only b. temperature only

c. both volume and temperature d. neither volume nor temperature

Q2. Assertion and Reason Type Questions.

Directions: In each of the following questions, a statement of **Assertion (A)** is followed by a statement of **Reason (R).** While answering a question, choose the correct one and mark it as

a. If both **Assertion (A)** and **Reason (R)** are true and Reason (R) is the correct explanation of Assertion.
b. If both **Assertion (A)** and **Reason (R)** are true but Reason is not the correct explanation of the **assertion (A)**.
c. If **Assertion (A)** is true and **Reason (R)** is false.
d. If both **Assertion (A)** and **Reason (R)** are false.
i. **Assertion:** Internal energy is a state function.
Reason: Internal energy depends on the temperature of the system.
ii. **Assertion:** In adiabatic process the specific heat of the gas is zero.
Reason: In adiabatic process no heat exchange of heat takes place between system and surrounding.

Q3. Answer the following questions.

i. What is the specific heat of a gas in an isothermal process?
ii. What is the difference between heat and work?
iii. Give one limitation of first law of thermodynamics.
iv. A car tyre contains air at a pressure of 6 atm & its temperature is 15^0C. The tyre suddenly bursts.Calculate the resulting temperature.γ_{air}=1.4.
v. What is an adiabatic process? What are the essential conditions for an adiabatic process to take place?.
vi. State first law of thermodynamics. On what conservation principle it is based?
vii. What are reversible and irreversible process? What are the conditions necessary for a reversible process?
viii. Give four basic difference between isothermal and adiabatic process

CASE STUDY

Q4. First law of thermodynamics

The first law of thermodynamics is the general law of conservation of energy applied to any system in which energy transfer from or to the surroundings (through heat and work) is taken into account. It states that the energy supplied to the system goes in partly to increase the internal energy of the system and the rest in work on the environment. Mathematically, **Δ**Q = **Δ**U + **Δ**W where **Δ**Q is the heat supplied to the system, **Δ**W is the work done by the system and **Δ**U is the change in internal energy of the system. **Δ**Q and **Δ**W depend on the path taken to go from initial to final states, but the combination **Δ**Q – **Δ**W is path independent.

i. The first law of thermodynamics is concerned with conservation of
a. number of molecules
b. number of moles
c. energy
d. temperature
ii. Which of the following is not the path function?
a. ΔQ
b. ΔQ+ΔW
c. ΔW
d. ΔQ- ΔW
iii. An electric heater supplies heat to a system at a rate of 120 W. If system performs work at a rate of 80J/s, the rate of increase in internal energy is
a. 30 J/s
b. 40 J/s
c. 50 J/s
d. 60 J/s
iv. A system goes from A to B by two different paths in the PV diagram as shown in the figure. Heat given to the system in path 1 is 1100J, The work done by the system along path1 is more than path 2 by 150 J. The heat exchanged by the system in path 2 is The heat exchanged by the system in path 2 is

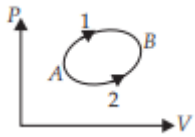

a. 800 J
b. 750 J
c. 950 J
d. 1050 J

v. A certain mass of gas is carried from A to B along three paths via ACB, ADB and AEB. Which one of the following is correct?

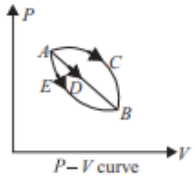

a. Work done via path ACB is minimum
b. Work done via path ADB is maximum
c. Work done via path ACB is maximum
d. Work done via path AEB is minimum

CHAPTER – 13 (KINETIC THEORY)

Q1. Read the questions and tick the correct option.

i. What happens at 0K
a. all liquid freezes
b. molecular motion stops
c. efficiency of engine becomes infinite
d. pressure increases

ii. The number of dergree of freedom for diatomic gas molecule is
a. 1
b. 2
c. 3
d. 6

iii. The root mean square velocity of ideal gas varies with temperature as
a. directly
b. inversely
c. unaffected
d. varies in complex manner

iv. The mean kinetic energy per unit volume of a gas E. is related to average pressure, exerted by the gas is
a. E=2/3 P
b. E=3/2 P
c. E=P
d. E=5/4 P

v. The ratio of rms velocity of the molecules of an ideal gas at 240 K and 60 K is
a. 2
b. 3
c. 4
d. 6

Q2. Assertion and Reason Type Questions.

Directions: In each of the following questions, a statement of **Assertion (A)** is followed by a statement of **Reason (R).** While answering a question, choose the correct one and mark it as

a. If both **Assertion (A)** and **Reason (R)** are true and Reason (R) is the correct explanation of Assertion.
b. If both **Assertion (A)** and **Reason (R)** are true but Reason is not the correct explanation of the **assertion (A)**.
c. If **Assertion (A)** is true and **Reason (R)** is false.
d. If both **Assertion (A)** and **Reason (R)** are false.

i. **Assertion:** The ratio of Cp and Cv is more for helium gas than hydrogen gas.
Reason: Atomic mass of helium is more than hydrogen.

ii. **Assertion:** For monoatomic gas R/Cv= 0.67.
Reason: For monoatomic gas Cv=3R/2

Q3. Answer the following questions.

i. Write the equation of state for 16gm of O_2 ?

ii. Why evaporation causes cooling?

iii. On what factors average kinetic energy of gas molecules depends?

iv. The density of carbon dioxide gas at 0°C and at a pressure of 1.0×10^5 Nm^{-2} is 1.98 kgm^{-3}. Find the rms speed of its molecules at 0°C & 30°C. Pressure is constant

v. State the law of equipartition of energy. Prove that for an ideal gas = 1 + 2/f., where f is no. of degrees of freedom of gas molecules.

vi. At what temperature will the average velocity of oxygen molecules be sufficient so as to escape from the earth? Escape velocity from the earth is 11.0 km/s and the mass of one molecule of oxygen is 5.34×10^{-26}kg.

vii. State the postulates of kinetic theory of gases.

viii. Show average kinetic energy of a gas molecule is directly proportional to the temperature of the gas.

CASE STUDY

Q4. Law of Equipartition of Energy

In equilibrium, the total energy is equally distributed in all possible energy modes, with each mode having average energy equal to (1/2) k_BT. This is known as the law of equipartition energy. Each translational and rotational degree of freedom contributes (1/2) k_BT to the energy. Each vibrational frequency contributes
$2 \times (1/2)\ k_BT = k_BT$ energy since vibration has both kinetic and potential modes of energy.

i. According to the law of equipartition energy, each particle in a system of particles have thermal energy E equal to

a. 3/2 k_BT b. k_BT
c. 1/2 k_BT d. $3k_BT$

ii. The average energy per molecule of a triatomic gas at room temperature is

a. 3/2 k_BT b. 5/2 k_BT
c. 1/2 k_BT d. $3k_BT$

iii. The gases carbon- monoxide CO. and nitrogen are kept at same temperature. If their kinetic energies are E_1 and E_2 respectively, then

a. $E_1=E_2$ b. $E_1>E_2$
c. $E_2>E_1$ d. E_1 and E_2 cannot be compared

iv. Which of the following molecules does not possess vibrational energy?

a. Oxygen b. Nitrogen
c. Argon d. CO_2

v. The law of equipartition of energy holds good for all degree of freedom whether

a. Translational b. Rotational
c. Vibrational d. All of the above

CHAPTER -14 (OSCILLATIONS)

Q1. Read the questions and tick the correct option.

i. What is the time period of a pendulum hanged in a satellite, if T is the time period on the earth

a. zero b. infinite
c. T d. $T/\sqrt{6}$

ii. In a simple harmonic motion, when displacement is one half the amplitude, what fraction of total energy is kinetic?

a. ½ b. 3/4
c. zero d. ¼

iii. What is the time period of second's pendulum

a. 1 sec b. 2 sec

c. 3sec d. 4 sec

iv. A particle executes SHM. Then the graph of the velocity as a function of displacement is

a. a straight line b. a circle

c. an ellipse d. a hyperbola

v. The tension in a string of a simple pendulum is

a. constant b. maximum in the extreme position

c. Zero in the mean position d. none of these

Q2. Assertion and Reason Type Questions.

Directions: In each of the following questions, a statement of **Assertion (A)** is followed by a statement of **Reason (R).** While answering a question, choose the correct one and mark it as

a. If both **Assertion (A)** and **Reason (R)** are true and Reason (R) is the correct explanation of Assertion.

b. If both **Assertion (A)** and **Reason (R)** are true but Reason is not the correct explanation of the **assertion (A)**.

c. If **Assertion (A)** is true and **Reason (R)** is false.

d. If both **Assertion (A)** and **Reason (R)** are false.

i. **Assertion:** An oscillatory motion are periodic.

Reason: All motions are oscillatory.

ii. **Assertion:** The time period of simple pendulum depend on acceleration due to gravity.

Reason: Time period is mass dependent

Q3. Answer the following questions.

i. A particle executing SHM of period 8 s. After what time of its passing through the mean position willthe energy be half kinetic and half potential?

ii. What do you understand by restoring force acting on a vibrating body? Give its one example.

iii. A mass m is attached to a spring has a time period 2 s. If the mass is increased by 2 kg, the timeperiod becomes 3 s. find the initial mass.

iv. List any two characteristics of simple harmonic motion.

v. A particle starts executing SHM from its positive extreme position. Draw graphs showing variationof its potential energy and total energy with time.

vi. The periodic time of a body executing SHM is 2 s. After how much interval from t=0, will itsdisplacement be half of its amplitude?

vii. A body of mass 0.4 kg when suspended by an ideal spring increases the length of the spring by2 cm. What will the time period when a body of 2 kg is suspended by this spring?

viii. The acceleration of a particle executing SHM is 20 cm/s^2 at a distance 5 cm from its equilibriumposition. Calculate its time period

CASE STUDY

Q4. Energy in SHM

A particle executing SHM posseses both kinetic energy and potential energy. When a body is displaced from its equilibrium position by doing work upon it, it acquires potential energy. When the body is released, it begins to move back with a velocity, thus acquiring kinetic energy. Both kinetic and potential energies of a particle in SHM vary between zero and their maximum values.

i. In SHM,
a. potential energy is stored due to elasticity of system
b. kinetic energy is stored due to inertia of system
c. Both KE and PE are stated by virtue of elasticity of system.
d. Both in a. and b.

ii. The expression for displacement of an object in SHM is X= A cos ωt..The potential energy at t=T /4 is, where K is a constant,
a. 1/2 KA^2
b. 1/8 KA^2
c. 1/4KA^2
d. zero

iii. For a SHM, if the maximum potential energy become double, choose the correct option
a. Maximum kinetic energy will become double
b. The total mechanical energy will remain constant
c. Both a. and b.
d. Neither a. or b.

iv. A block is in simple harmonic motion as shown in the figure on a frictionless surface. i.e.

$\mu = 0$.

Choose the correct option

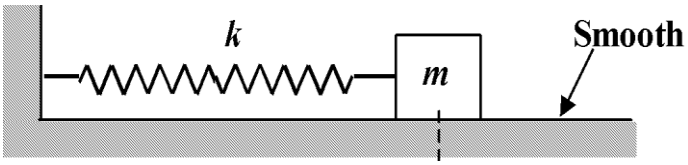

a. The kinetic energy varies between a maximum value and zero
b. The potential energy varies between a maximum value and zero
c. Total energy remains constant
d. All are correct

v. In simple harmonic motion, let the time period of variation of potential energy is T_1, and time period of variation of position is T_2, then relation between T_1 and T_2 is
a. $T_1 = T_2$
b. $T_1 = 2\,T_2$
c. $2T_1 = T_2$
d. None of these

CHAPTER - 15 (WAVES)

Q1. Read the questions and tick the correct option.

i. A particle on a trough of a wave at any instant will come to mean position after a time T=Time period.
a. T/2
b. T/4
c. T
d. 2T

ii. Two waves are propagating with same amplitude and nearly same frequency in opposite direction, they result in
a. beats
b. stationary waves
c. resonance
d. wave packet

iii. In wave motion what is transferred
a. Energy
b. Momentum
c. both energy and momentum
d. Matter

iv. The propagation constant of a wave is also called its
a. wave number
b. wavelength
c. frequency
d. angular wave number

v. The change in pressure and volume of air, when sound wave passes through air are

a. isothermal
b. isobaric
c. isovolumic
d. adiabatic

Q2. Assertion and Reason Type Questions.

Directions: In each of the following questions, a statement of **Assertion (A)** is followed by a statement of **Reason (R).** While answering a question, choose the correct one and mark it as

a. If both **Assertion (A)** and **Reason (R)** are true and Reason (R) is the correct explanation of Assertion.
b. If both **Assertion (A)** and **Reason (R)** are true but Reason is not the correct explanation of the **assertion (A)**.
c. If **Assertion (A)** is true and **Reason (R)** is false.
d. If both **Assertion (A)** and **Reason (R)** are false.

i. **Assertion:** The medium should possess elasticity and inertia for wave propagation.
Reason: Wave is a periodic disturbance .

ii. **Assertion:** A vibrating body always produces sound.
Reason: Sound is the characteristic property.

Q3. Answer the following questions.

i. The shape of the pulse gets distorted as it passes through a dispersive medium. Why?
ii. What is the periodic wave function?
iii. Why there are so many holes in a flute?
iv. What is a wave motion. Give two characteristics of wave motion.
v. What are beats? Write the essential conditions for the formation of beats.
vi. What are the characteristics of stationary waves?
vii. Describe various modes of vibrations of an open organ pipe
viii. What should be minimum length of an open organ pipe for producing a note of 110Hz? The speed of sound is 330m/s.

CASE STUDY

Q4. Displacement of wave

A stone is dropped in a liquid at rest in a tank. The fig. (a) below show circular wave fronts. The waves produced at the centre of a circular ripple tank. Two corks A and B, floats on the water and moves up & down on the surface as the wave passes. The wavelength of wave is 8.0 cm.

The Fig.(b) shows how the displacement of A varies with time.

(

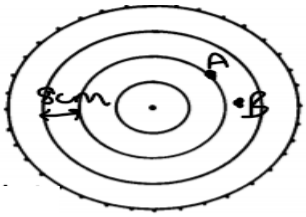

a.

b.

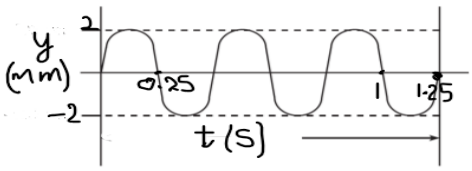

i. Name the type of waves produced on water surface?

a. Longitudinal wave
b. Transverse wave
c. Sound wave
d. EM wave

ii. What is the amplitude of the vibrations of A as wave passes?

a. 2mm
b. 0.25 mm
c. 0.50 mm
d. 8mm

iii. The horizontal distance between A and B is half the wavelength of the wave. Then, the displacement of B with time is

a. same as that of A with equal magnitude
b. opposite to that of A with equal magnitude
c. double in magnitude as that of A
d. half in magnitude as that of A

iv. What is the frequency of the wave?

a. 4 Hz b. 0.4 Hz c. 2 Hz d. 0.2 Hz

v. If the distance between the centre of the ripple tank and is edge is 40 cm. then, the time taken by the wave to travel from the centre of the tank to the edge is

a. 5s b. 2.5s c. 3s d. 4.5s